PETROBRAS	DATASHEET	No. I-FD-3010.2G-5330-660-KES-303	
	CLIENT: E & P		SHEET 1 of 4
	JOB: BUZIOS FIELD AREA DEVELOPMENT		
	AREA: PETROBRAS 78 (P-78)		
SRGE	TITLE: DATASHEET - OILY WATER SEPARATOR PACKAGE (SAO-5330501)		(I)
			SCP78

Keppel Shipyard / Hyundai Heavy Industries	CONTRACT: 5900.0117818.21.2		
	CONTRACTOR Nº -		
[File: MICROSOFT WORD/V.2003/I-FD-3010.2G-5330-660-KES-303_A]	TECH.RESP.:: Shravan Kamat	CREA Nº: -	INITIALS: -

INDEX OF REVISIONS

REV.	DESCRIPTION AND/OR REVISED SHEETS
0	FOR DESIGN
A	APPROVED FOR DESIGN

	REV. 0	REV. A	REV. B	REV. C	REV. D	REV. E	REV. F	REV. G	REV. H
DATE	18/06/2021	19/08/2021							
DESIGN	KES	KES							
EXECUTION	DongkwanLee.HHI	DongkwanLee.HHI							
CHECK	YounchulChoi.HHI	YounchulChoi.HHI							
APPROVAL	Choong Kim Whye	Choong Kim Whye							

INFORMATION IN THIS DOCUMENT IS PROPERTY OF PETROBRAS, BEING PROHIBITED OUTSIDE OF THEIR PURPOSE

FORM OWNED TO PETROBRAS N-0381 REV. L

PETROBRAS	DATASHEET	No. I-FD-3010.2G-5330-660-KES-303	REV. A
	PETROBRAS 78 (P-78)	SHEET 2 of 4	
	TITLE: DATASHEET - OILY WATER SEPARATOR PACKAGE (SAO-5330501)	(I)	
		SCP78	

EQUIPMENT	OILY WATER SEPARATOR PACKAGE (SAO-5330501) (1 x 100%)					
SERVICE:	TO PERFORM THE BILGE WATER SEPARATION AND DISCHARGE TO SEA OVERBOARD WITH MAXIMUM OIL CONTENT OF 15 PPM					
TYPE:	GRAVITY FILTRATION					
OPERATING CASE:	5 m3/h WITH THE MAX OIL CONTENT OF 500 PPM					
TOTAL QUANTITY:	1 (ONE)	SPARE: -				
DRIVER	MAIN:	N/A		SPARE:-		
	FEED:	X	NORMAL			ESSENTIAL
	AUTOMATIC RESTARTING:	X	YES			NO
OPERATION		CONTINUOUS				
	X	INTERMITTENT	NUMBER OF START-UP/HOUR:			

PACKAGE OPERATING CONDITIONS			
LIQUID:	BILGE WATER		
FLOW RATE, m³/h	MIN. 5	NORMAL: -	MAX.: -
TEMPERATURE, °C	MIN. -	NORMAL: 30	MAX.: -
PACKAGE PRESSURE, barg	MIN.: -	NORMAL: NOTE 1	MAX.: NOTE 1

PACKAGE TIE-IN CONDITIONS (NOTE 7)			
<OILY WATER INLET>			
SUCTION PRESSURE, barg	MIN.: -0.3 (NOTE 2, ~~HOLD 1~~)	NORMAL: -	MAX.: -
DESIGN PRESSURE, barg	3.5/FV		
OIL CONTENT IN WATER,ppm	MIN.	NORMAL:	MAX.: 500 (NOTE 3)
<TREATED WATER DISCHARGE>			
DISCHARGE PRESSURE @ package tie-in, barg	MIN. 4	NORMAL:	MAX.:
DESIGN PRESSURE, barg	6.7(NOTE 1)		
<REJECT OIL/RECIRCULATION>			
OPERATING PRESSURE, barg	MIN.:	NORMAL: ATM	MAX.:
DESIGN PRESSURE, barg	3.5/FV		

PACKAGE PERFORMANCE	
MAXIMUM OIL CONTENT TO SEA OVERBOARD, ppm:	15 (NOTE 4)
CAPACITY, m3/h	5

CONTAIMINATION		
CORROSION BY: NOTE 9		CONTENT:
EROSION	BY:	CONTENT:
	MAX. SIZE OF PARTICLES, um: NOTE 10	

DESIGN CONDITIONS	
SYSTEM DESIGN TEMPERATURE, °C:	60
SYSTEM DESIGN PRESSURE, barg:	6.7/FV (NOTE 1)

NOTES:

1. Package oprerating/design pressure shall be confirmed by PACKAGER.
2. PACKAGER to consider suction lift elevation as described on appendix 1 and ensure feed pump suction availability.
3. PACKAGER to inform maximum allowable oil content for feed stream
4. PACKAGER to comply with IMO MEPC 107 (49) requirements and Marpol Annex I-Reg.21.
5. ~~All white blanks shall be completed by PACKAGER / MANUFACTURER.~~
6. All deviations from this data sheet shall be clearly informed as requested by I-ET-3010.1M-5330-667-P4X-001 item 1.6.
7. Suction and discharge pressure is at package battery limit.
8. Supplier shall refer to Appendix I for Oily Water Separator Package install location
9. To be considered sea water in oily water inlet
10. PACKAGER to advise allowable value.
11. For more details, refer to Technical Specification for Oily Water Separator Package(I-ET-3010.1M-5330-667-P4X-001).
12. Utility System Data:

Utility Condition	Design Pressure	Design Temp.	Operating Pressure	Operating Temp.
Instrument Air	12.26 barg	70 ℃	9.2 barg	40 ℃
Fresh Water	12.3 barg	40 ℃	5.0 barg(Min)/ 6.3 barg(Max)	30 ℃

13. Interconnection Size:

Interconnection	Nozzle (inch)	Remark
Untreated Water Inlet		Vender to advice
Treated Water Outlet		Vender to advice
Return to Bilge		Vender to advice
Waste Oil		Vender to advice
Clean Bilge Holding		Vender to advice
Skid Drain		Vender to advice
Pressure Relief Clean Bilge Holding		Vender to advice
Monitor Sample Clean Bilge Holding		Vender to advice
Instrument Air		Vender to advice
Clean Water Supply		Vender to advice
OCM Clean Water Supply		Vender to advice
Drain (I STG)		Vender to advice
Drain (II STG)		Vender to advice

~~HOLDS:~~

1. ~~Estimated value calculated according to preliminary Lay-out; therefore, it shall be confirmed / updated during the Detail Design phase~~

Appendix I

Schematic Diagram of Oily Water separator package interface

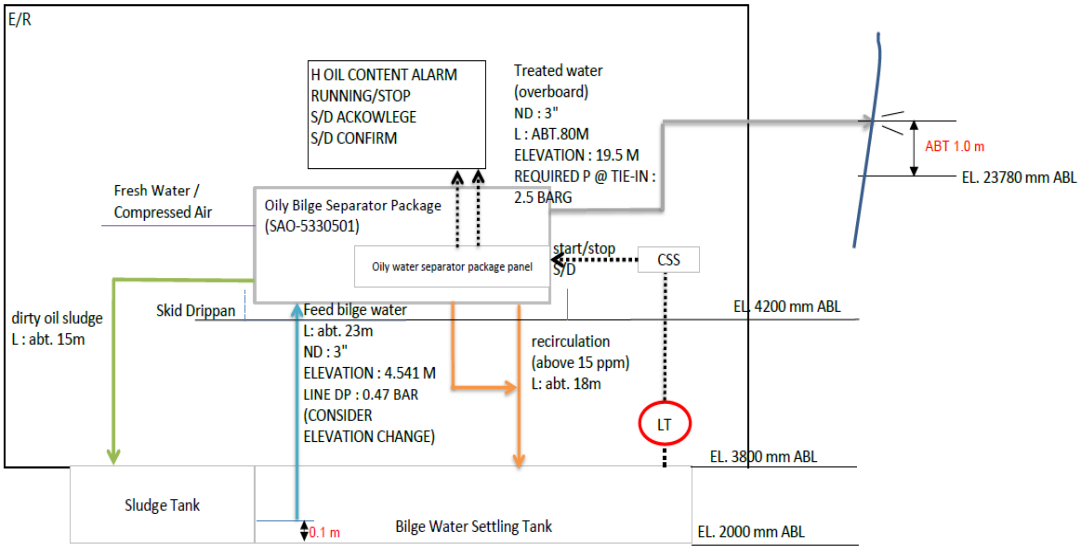

~~Estimated value calculated according to preliminary Lay out; therefore, it shall be confirmed / updated during the Detail Design phase.~~